The United Nations University

GEOTHERMAL TRAINING PROGRAMME
Orkustofnun, Grensásvegur 9,
IS-108 Reykjavík, Iceland

Reports 2003
Number 16

THE USE OF GEOTHERMAL ENERGY IN A LOW-TEMPERATURE FIELD WITH A CASE STUDY FROM SHARGALJUUT, MONGOLIA

Iderbat Lkhagvadorj
Renewable Energy Corporation
P.O. Box 479, Ulaanbaatar 210136
MONGOLIA
idergerel@mobinet.mn

ABSTRACT

The report describes a demonstration project for the direct use of geothermal energy from a low-temperature geothermal field in Shargaljuut, Mongolia. The objective of the project is to point out suitable ways to develop the geothermal energy from the geothermal field, investigate reasonable applications for the usage of the geothermal energy and possible cascading of various applications.

Equivalent peak-load time for the space heating system in the Shargaljuut area is calculated as 4300 hours a year and the heating load duration is relatively stable. Hence, a single distribution geothermal space heating system without a peak load station can be used. According to chemical analysis, the thermal water is suitable for direct-use applications, and no problems related to scaling or corrosion are expected if care is taken in designing of storage tanks and systems for collecting water. Heating requirements of the various applications at design conditions are 1220 kW for the space heating system, 370 kW for the domestic hot tap water, 295 kW for the hot spa, 45 kW for the snow melting, 5.4 kW for the Ger, 410 W/m^2 for the greenhouses, and 50 W/m^2 for soil warming. Maximum production from the geothermal reservoir is expected to be at 50 kg/s as peak load.

1. INTRODUCTION

Mongolia is situated in the northern part of the Asian plateau, where mean elevation is 1500 m above sea level, covering an area of 1.57 million km^2. The northwest and central parts of Mongolia are high mountainous regions, where the eastern part is a vast plain steppe and the southern part is semi-desert. The population of Mongolia totals 2.4 million, with 45% rural and 55% urban; 30% of the total population lives in the capital city. Because of vital importance of pastureland for livestock, nomadic families settle scattered, constantly moving all the year around.

The centralized electricity network in Mongolia consists of western, central, and eastern grid systems, where electricity is produced by coal fuelled thermal-electric power plants or is imported, and serves 50% of the total population, but only 40% of the land area. District heating systems in major cities are based

on thermal-electric power plants or coal fuelled boilers, which serve 40% of the total population. Other local centres are in critical situation of energy supply, where diesel power stations and five hydropower plants are supplying domestic consumers with electricity mainly for 4-5 hours daily, except at four provincial centres where electricity is available for 24 hours a day. Some major institutions such as hospitals, primary schools, telecommunication facilities, and governmental offices are supplied by small photovoltaic systems and wind turbines. Heating demand is covered by small coal boilers and simple household stoves fired by coal, firewood, agricultural waste, animal dung etc. Nomadic families, 45% of the total population, are self-sufficient with small-sized photovoltaic, wind electric systems. The rest of them have no reliable access to modern electricity or space heating systems. These situations encourage an increase in the efficiency of existing energy systems, and the investigation of alternative and renewable energy sources such as solar, wind, hydro, as well as geothermal energy.

Mongolia has 42 low- and medium-temperature hot springs, mainly distributed in central and western provinces but presently, there is almost no commercial use of geothermal energy. Most of the hot springs are used for bathing and traditional balneological purposes only. Some greenhouses and small scale heating systems are in operation to a limited extent. Ample and comprehensive studies on the geothermal resources and their potential use have not been carried out in Mongolia.

Shargaljuut geothermal field is the most suitable site in Mongolia for utilizing geothermal energy for various purposes, because of its resource, good location for tourism and balneology, certain available market, and some present usage of hot water for heating. The main emphasis of this report is to review possible applications to exploit the geothermal resources within the area, and evaluate multiple uses.

2. GEOTHERMAL FIELD IN SHARGALJUUT

2.1 General information

The Shargaljuut hot spring is located at 2130 m a.s.l., at N46°21 and E101°14 , in the Valley of Shargaljuut River, and on the southern edge of Khangai mountainous range, which occupies much of central Mongolia and trends NW-SE. The hot spring is situated in the territory of Erdene-Tsogt soum (soumisan administration unit of Mongolia), 61 km from Bayankhongor province centre, and 42 km from Erdene-Tsogt soum centre. The highest point within the region is an unnamed hill near the origin of Ugalz River at 2803 m a.s.l., and the lowest point is the riverbed of Shargaljuut River near the hot springs at 2120 m a.s.l.

The Shargaljuut geothermal field is situated in the Inner Baikal - Mongolian fold belt, characterized by NE-SW trending faults, which are sub-parallel to the general trend of the Shargaljuut river basin, and SE-NW trending faults. Hot springs locations are coincident with the intersection of the two fault sets, which is also the origin of the main discharge. Locations of the Shargaljuut hot spring and the structure of Khangai geothermal system are shown in Figure 1.

2.2 Geothermal energy resources

The first exploration of the Shargaljuut hot spring area was conducted in 1957 by a spring expedition from the Academy of Sciences in Mongolia. A regional geology exploration and mapping in the Shargaljuut area was undertaken in 1972, whereas additional hydro-geological mapping and chemical analyses were conducted in 1973 by the Geology Authority of Ulaanbaatar. Another hydro-geological study was done in 1981 by a Mongolian-Russian spring expedition.

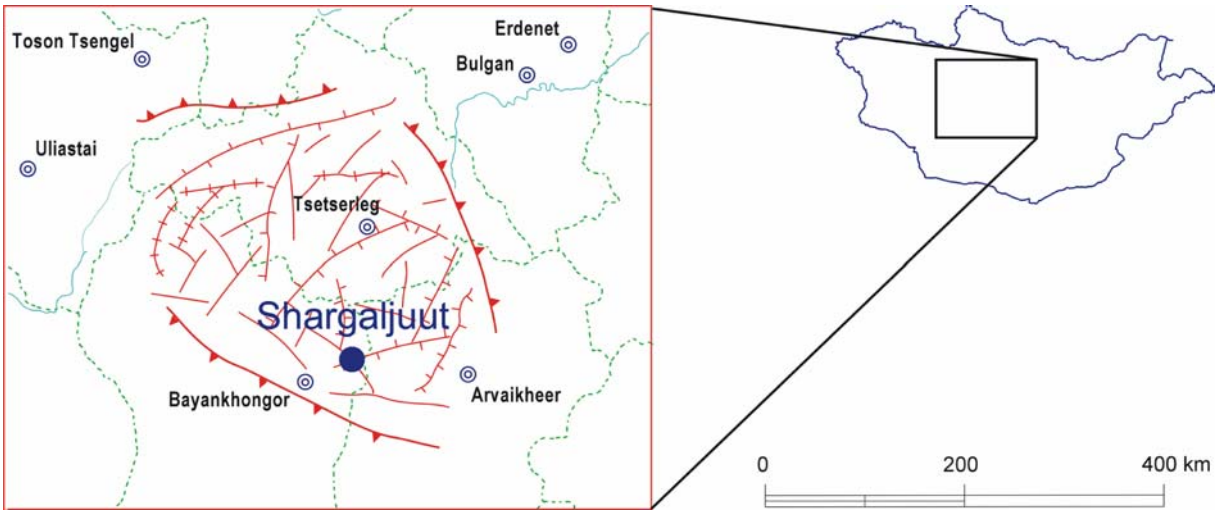

FIGURE 1: Location of Shargaljuut hot spring and tectonic rifts of Khangai geothermal system

As a result of these studies, a sketch map of regional geology was made in the scale of 1:1,000,000, a sketch map of regional hydro-geology was made in the scale of 1:500,000, main chemical components of spring water were analysed, and temperature and flow rate of hot springs were measured for a period of time. The highest temperature of geothermal water on the surface was 89˚C, and total discharge from the hot springs by free flow was 51 kg/s. Temperatures of the hot springs vary from 40 to 89˚C due to decrease in temperature when the geothermal water rises to the surface. Geothermal water rises to the surface along the dykes and faults, and discharges immediately when it reaches the surface. But some of the water flows through the uppermost layer of soil, taking time to discharge, and it causes the decrease in temperature. Long-term monitoring shows that the chemical composition and flow rate of the hot springs is not affected by the amounts of precipitation, climate condition, and air temperature (Lkhagva, 1973).

Nine exploration and drinking water wells were drilled along the main fault, but not close to the origins of the hot springs. Depths of the wells are in the range 4-90 m. Hot water was found in wells 2, 3, 4, and 6 where the temperatures are in the range 32-48˚C, flow rate 0.4-0.9 kg/s, and depths of these wells 20-70 m. Drinking water was found in well 8, where temperature is 6˚C, and flowrate 1.1 kg/s. The depth of this well is 90 m.

If natural discharge of Shargaljuut hot spring is taken without any decrease in temperature and cooled by 60˚C, the thermal energy extracted from the geothermal water will be 12.8 MWt. If more geothermal water is exploited from the reservoir, more thermal energy will be extracted. Additional geophysical surveys, reservoir engineering, and geochemical studies are needed in order to evaluate the geothermal energy resource in Shargaljuut.

2.3 Current utilization of geothermal energy

A state owned sanatorium with capacity of 30 beds was built at the Shargaljuut hot spring in 1963. Since then, the sanatorium has been gradually expanded to a resort centre and its capacity was increased up to 350 beds in summer and 140 beds in winter. A sanatorium building with 50 beds, a hotel building with 90 beds, a restaurant with 120 seats, a cultural centre with 100 seats, a 750 m^2 greenhouse, summer houses, a storage house, and a garage were built. The sanatorium complex has a fresh water supply system and sewage treatment station with capacity of 200 m^3/day, which serves hotel and sanatorium buildings. The resort centre receives 2500 customers per year and 30,000 customer's daily visits.

The first attempt to use geothermal water for heating was made in 1973. A concrete dam to collect hot

water was built on the origin of 3 hot springs with temperature of 88˚-89˚C and a total discharge of 5.5 kg/s. The sanatorium building with 50 beds and restaurant with 120 seats were heated by geothermal water with temperature of 88˚-89˚C, and flow rate of 2.5 kg/s. Return water temperature was 72˚C (Lkhagva, 1973). Today, geothermal water with the temperature of 70˚-89˚C, and a total flow rate of 720-750 m^3/day is collected from the 5 hot springs and is used for heating of the sanatorium and hotel buildings, cultural centre, restaurant and greenhouse. Geothermal water with temperature of 40-50˚C, and total flow of 30-40 m^3/day, is used for balneology purposes (Dorjsuren et al., 1990). Geothermal water is only collected with a concrete dam and stored in a reservoir tank, which is located approximately 17 m above the buildings, and the use is by gravity flow.

3. CLIMATE CONDITION

Shargaljuut hot spring is located north of the 0˚C isothermal line of Mongolia and annual mean temperature within the region is -3˚C. Climate is harsh and continental. Winters are cold and dry, whereas summers are warm with occasional precipitation. There are large variations in seasonal and diurnal temperatures, and the amount of precipitation varies through the year. Annual precipitation is 200-250 mm; minimum precipitation in winter is 5-10%, and maximum in summer is 60-70% of total. Annual mean wind speed is not high, only 2.5 m/s, and the main wind direction is along the valley, from northeast or southwest, respectively.

In order to obtain good calculation results, representative climatic data over many years should be used. Weather data was collected and calculated from the meteorological compilation of Bayankhongor province (Meteorological Institute of Mongolia, 1990), which includes monthly mean outdoor and soil temperature, precipitation, wind speed, and relative humidity for many years. Meteonorm V4.0 program was used to simulate the outdoor temperature profile and solar radiation profile in Shargaljuut hot spring area. Meteonorm V4.0 program includes climate normal of the World Meteorological Organization from the years 1961-90, from about 2400 stations all around the world, and is based on 10 years of measurements (Remand and Lang, 1999). Graphs of outdoor temperature profile, outdoor temperature duration curve, monthly mean outdoor temperature, monthly mean soil temperature, monthly mean wind speed and monthly precipitation are shown in Figures 2-7, respectively, whereas a direct solar radiation profile on a horizontal plane is shown in Table 1.

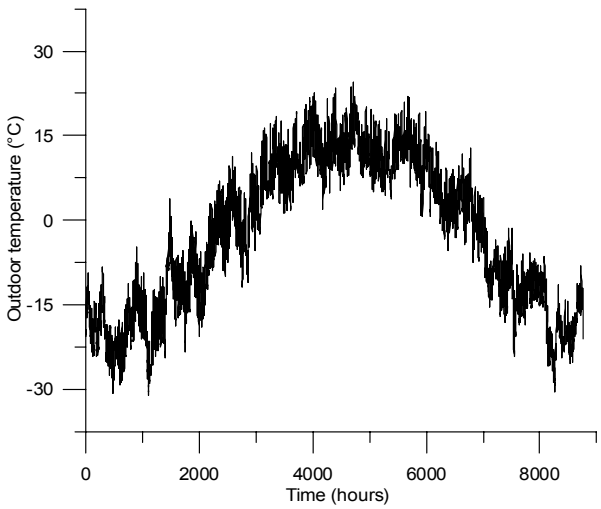

FIGURE 2: Outdoor temperature profile based on hourly values

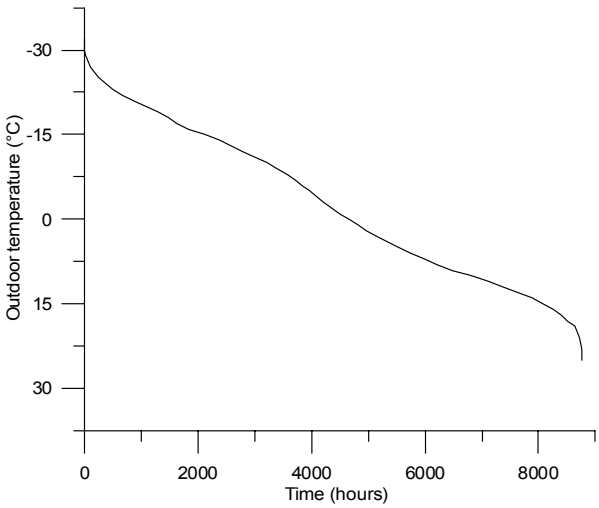

FIGURE 3: Outdoor temperature duration curve based on hourly predicted values

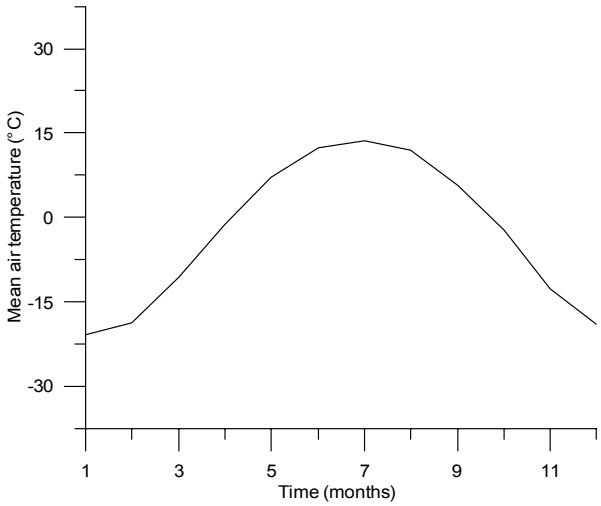

FIGURE 4: Monthly mean outdoor temperature

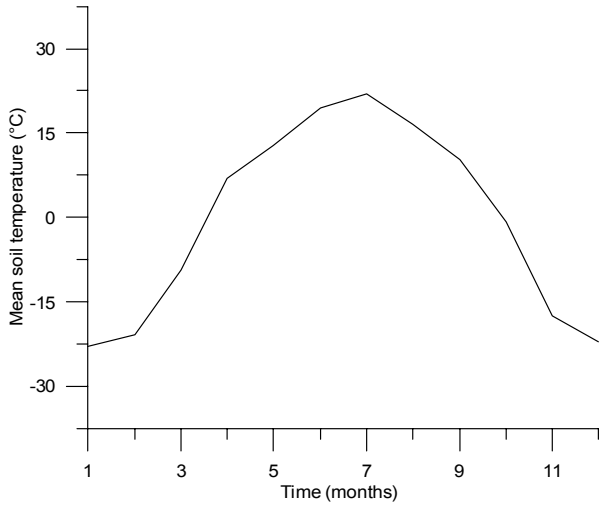

FIGURE 5: Monthly mean soil temperature

TABLE 1: Direct solar radiation profile on horizontal plane [W/m^2]

Hours	Jan	Feb	Mar	Apr	May	Jun	Jul	Aug	Sep	Oct	Nov	Dec
0												
1												
2												
3												
4												
5				0	0	0	0	0				
6			0	7	65	85	63	16	0	0		
7		0	13	100	180	183	159	104	56	3	0	
8	0	14	123	230	328	314	278	214	175	94	16	0
9	52	123	273	378	443	433	375	342	298	217	121	51
10	163	255	402	521	562	522	470	448	431	340	233	160
11	254	372	536	609	631	604	562	515	538	441	316	225
12	305	439	606	652	711	638	594	570	573	488	373	278
13	341	466	619	668	709	659	601	603	587	500	361	283
14	304	425	572	625	674	621	588	546	569	444	320	242
15	229	349	490	536	572	583	539	483	467	338	231	184
16	138	239	363	451	466	473	462	400	334	235	120	83
17	34	128	222	324	341	359	348	302	214	102	14	0
18	0	13	102	174	230	240	232	185	88	6	0	
19		0	1	49	106	133	137	73	6	0		
20			0	0	11	39	38	2	0			
21					0	0	0	0				
22												
23												

An outdoor temperature duration curve was calculated and drawn based on hourly values, and it shows outdoor temperature below +15˚C for 8072 hours a year, where heating is needed. Equivalent peak-load time is 4300 hours per year.

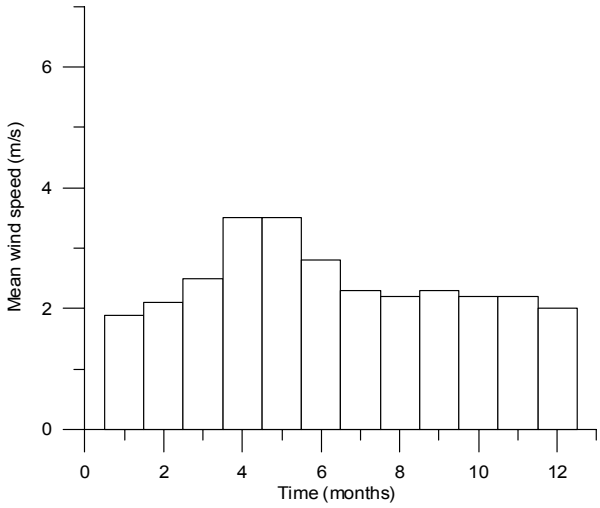

FIGURE 6: Monthly mean wind speed

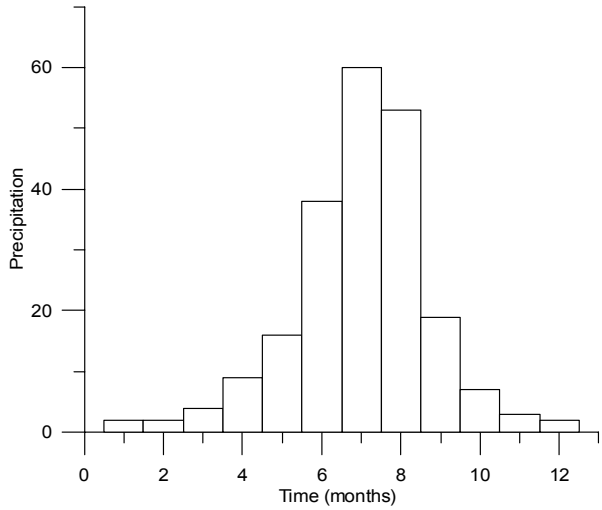

FIGURE 7: Monthly accumulative precipitation

4. CHEMICAL ANALYSIS

A water sample from Shargaljuut hot spring was taken and analysed by the Chemical Institute of Mongolia, using standard analytical methods. The chemical composition of geothermal water is shown in Table 2. The collection and lack of preparation of samples in the field may cause some of the analyses to be doubtful. This applies especially to the determination of pH and carbonate. The pH value is one of the most important components in all calculations of mineral solubility and scaling potential. Lack of filtration before acidification could also affect the analysis of cations.

TABLE 2: Chemical composition of geothermal water of Shargaljuut hot spring (mg/l)

T(˚C)	89	**NH_3**	0.94	**K**	2.38	**Cl**	5.67
pH/T(˚C)	9.00/23	**B**	0.20	**Mg**	0.49	**SO_4**	50.60
CO_2	58.00	**SiO_2**	105.00	**Ca**	3.21	**Al**	0.00
H_2S	13.10	**Na**	76.90	**F**	11.30	**Fe**	1.50

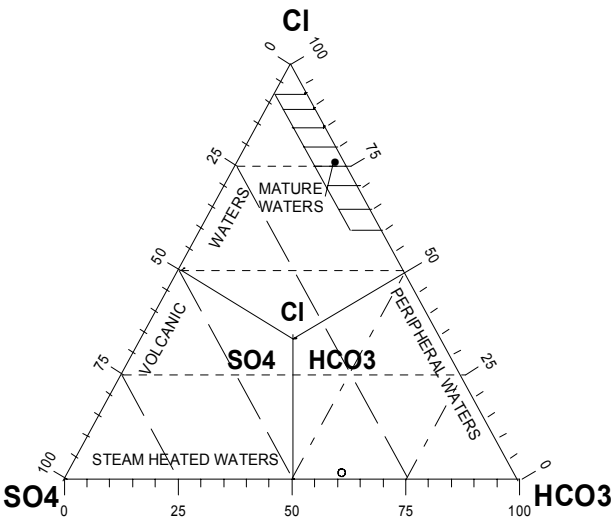

FIGURE 8: The classification of Shargaljuut hot spring water according to Giggenbach's Cl-SO_4-HCO_3 ternary diagram

The geothermal water is alkaline, contains bicarbonate and some sulphate, but is low in chloride. The classification of this water according to Giggenbach's Cl-SO_4-HCO_3 diagram is shown in Figure 8 (Giggenbach, 1991). Equilibrium of the water according to Giggenbach's Na-K-Mg diagram is shown in Figure 9 (Giggenbach, 1991).

The WATCH program (Arnórsson et al., 1982; Bjarnason, 1994) was used for calculation of chemical geothermometers, scaling and corrosion potential. The program reads chemical analyses of water, gas and steam condensate samples collected at the surface, and computes the chemical composition of aquifer fluids. This includes the pH, aqueous speciation, partial pressures of gases, redox

potentials, and activity products for mineral dissolution reactions. The WATCH program can also be used to compute the resulting species concentrations, activity coefficients, and activity products and solubility products when the equilibrated fluid is allowed to cool conductively or by adiabatic boiling from the reference temperature to some lower temperature. This is particularly useful in the study of scaling.

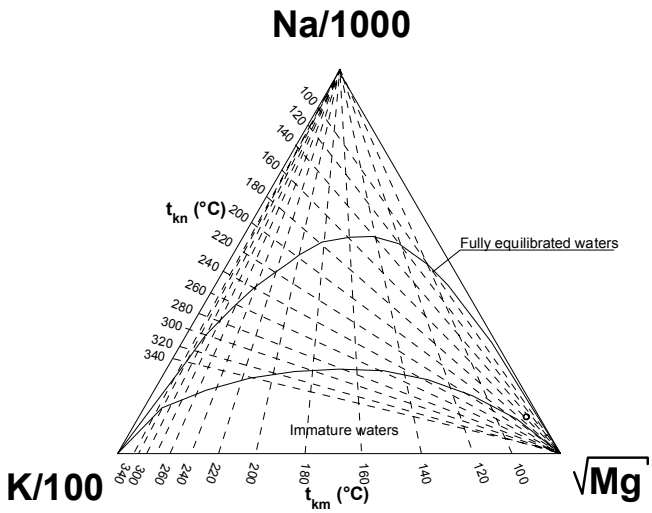

FIGURE 9: Equilibrium of Shargaljuut hot spring water according to Giggenbach's Na-K-Mg ternary diagram

The ionic balance of the analysed sample was -2.49, so the quality of the analysis is acceptable. The Na-K geothermometer (Arnórsson et al., 1982), the chalcedony geothermometer (Fournier, 1977), and the quartz geothermometer (Fournier and Potter, 1982) were used to evaluate reservoir temperature, and the results are shown in Table 3. The sodium-potassium and chalcedony geothermometers give almost the same value of reservoir temperature, which is close to the measured temperature on the surface. It indicates that a higher reservoir temperature is not to be expected.

TABLE 3: Calculated geothermometer temperatures for Shargaljuut hot spring

Measured temperature	Na-K geothermometer	Chalcedony geothermometer	Quartz geothermometer
89˚C	98.5˚C	105.9˚C	133.2˚C

Scaling of silica and calcite minerals is often associated with the utilization of geothermal water. Physical and chemical conditions causing mineral deposition from geothermal water allows evaluating scaling potential of geothermal water and overcoming associated problems. The concentration of silica in geothermal water increases with increasing temperature and depends on the solubility of the minerals, chalcedony, and quartz. During cooling of geothermal water, silica remains in solution until the solubility of amorphous silica is reached. At lower temperature, the water is super-saturated and silica deposition can be expected. According to calculations, geothermal water from Shargaljuut hot spring is under-saturated in amorphous silica (the saturation index is -0.5), so deposition of silica is not expected. Calcite is the most common scaling product in geothermal water. Its solubility increases with decreasing temperature. Therefore, cooling of geothermal water does not cause scaling of calcite, but calcite scaling is associated with boiling of water or mixing of waters with different chemistry and temperature. Geothermal water from the Shargaljuut hot spring is near equilibrium with calcite (saturation index is 0.024), so calcite scaling can occur if the water is boiled or mixed with another type of water. But no scaling problem is expected during cooling of the water. Deposition of magnesium silicate can form where fresh groundwater with relatively high content of magnesium is mixed with geothermal water.

Corrosion of carbon steel is experienced in association with water containing dissolved oxygen at temperatures below 80˚C, carbon dioxide waters below 100˚C, and water with rather high chloride concentration. Corrosion is often experienced in association with mixing of fresh water and geothermal water where dissolved oxygen increases. Due to fast reaction between dissolved oxygen and hydrogen sulphide, these components are not present in water at the same time. Geothermal water from Shargaljuut hot spring contains about 13.10 mg/l of hydrogen sulphide, therefore corrosion due to dissolved oxygen is not expected since the hydrogen sulphide remains in the water. Reservoir tanks and other system components should be designed to prevent absorption of oxygen into geothermal water. If dissolved

oxygen is detected, it will result in increased corrosion. Copper pipes and equipment should be avoided in the whole system for geothermal water containing hydrogen sulphide. Geothermal water from the Shargaljuut hot spring contains 10-11 mg/l of fluoride, which is far above the maximum allowed limit for drinking water.

This brief chemical analysis was based on old chemical data, which can be doubtful, so further analyses are needed.

5. DESIGN OF GEOTHERMAL SYSTEM

A geothermal energy utilization process is defined as the process where geothermal energy is extracted from geothermal fluid and utilized for some applications. Therefore, the process depends heavily on the specific characteristics of the geothermal reservoir, chemical composition of the geothermal fluid, distribution and control systems, and characteristics of applications that are intended to use geothermal energy.

5.1 Collecting the geothermal water

There are several ways to collect geothermal water from the natural hot springs. The simplest way is to build concrete dams around the origins of hot springs, and connect dams to an underground reservoir tank. Geothermal water collected from the hot spring flows toward the reservoir tank and is sent to the system by gravity flow or pumping. If the geothermal water is boiling, pressure decrease by pumping would cause the water to boil right in the pump, and furthermore, it would cause serious scaling and corrosion problems in the pump. In this case, an extra well is used to create pressure to prevent boiling of thermal water in the pumps. If a concrete dam is built and used for the Shargaljuut hot spring, maximum production would be expected as high as 10-20 kg/s thermal water of 89˚C. Since location of the hot springs is scattered, it is impossible to collect all the water, and geothermal water is also cooled before it rises to the surface. If thermal water is in direct contact with the atmosphere, corrosion could take place in the system.

Another way is to dig deep into the hot springs down to 5-6 m, and place a slotted concrete case for pumps. The excavated hole is filled with pre-washed gravels or bigger stones with diameter of 5-8 cm. The gravel layer is covered with fibreglass cloth, and the excavation hole is completely filled with clay, sand, gravel and earth. A line-shaft pump is installed into the slotted concrete case and the geothermal water is pumped towards the de-aerator tank. In this case, more production of thermal water is expected, because the water table could be lowered and thermal water can be collected into the excavated hole. Corrosion problems will be reduced since thermal water is not in direct contact with atmosphere.

The most expensive, but better way, is to drill down to the geothermal reservoir, place an electric submersible or line-shaft pump in the well, and pump the thermal water to a de-aerator tank. With continuous monitoring of the geothermal reservoir possibly combined with re-injection, a constant production of thermal water could be sustained. With reservoir assessment, modelling and pumping test, a maximum and sustainable production of thermal water from the geothermal reservoir can be evaluated.

5.2 Borehole pumps

Pumping is often necessary to bring geothermal fluid to the surface. For direct-use applications, two types of borehole pumps are used. These are line-shaft and electric submersible pumps. In a line-shaft pump, an electric motor mounted above the wellhead drives the pump. In a submersible pump, a long and small

diameter electric motor is used as the driver, and is usually located below the pump through a short shaft with a sealed section to protect the motor from the well fluid. Selection of a pump type is dictated by depth of setting, size and deviation of the well, or temperature of geothermal fluid. Line-shaft pumps are preferred over the submersible pumps for their proven track records in geothermal wells with high temperatures. But for setting depths exceeding about 300 m, a submersible pump is required. Detailed drawing of a typical line-shaft pump is shown in Figure 10. Enclosed line-shaft pumps require that lubricant, usually filtered well water, be supplied before the pump is started. In general, continuous or nearly continuous operation of well pumps is preferred.

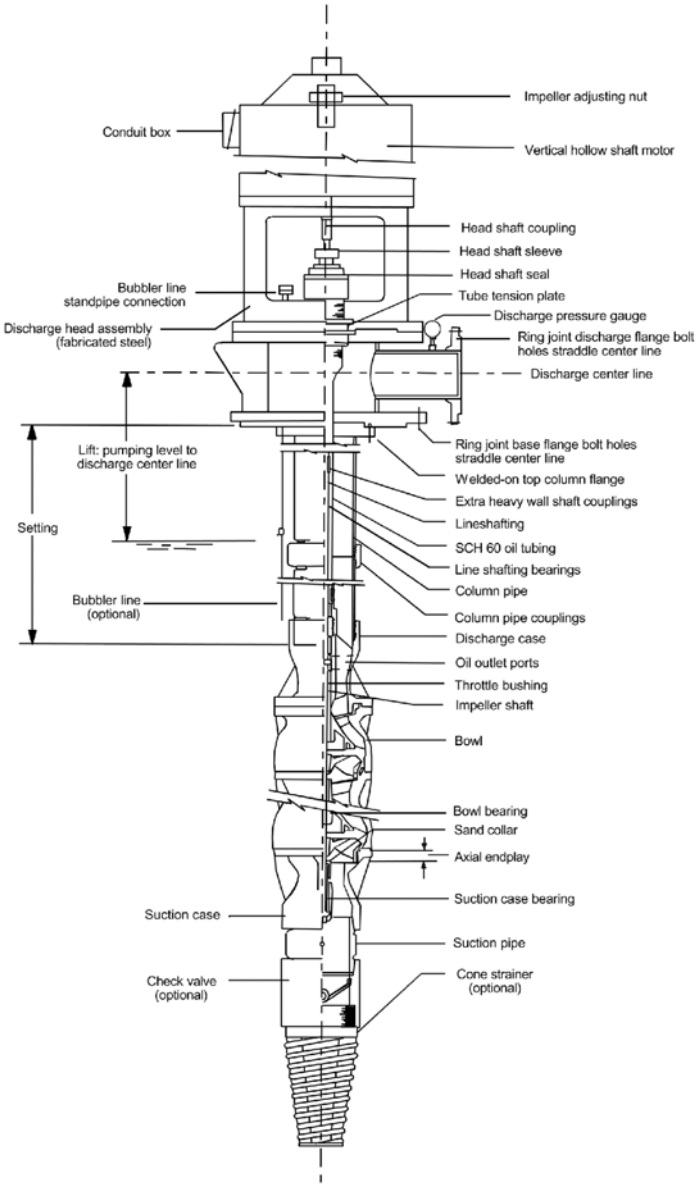

FIGURE 10: Typical line-shaft pump (Culver and Rafferty, 1998)

The proposed system in Shargaljuut involves the drilling of one geothermal production well. The production well will be equipped with a borehole pump with a suitable variable frequency speed drive converter. It is assumed that a line-shaft pump driven with a surface-mounted electric motor and equipped with water lubricated closed shaft system, is installed. The pump is expected to be designed with an instant capacity of 50 kg/s. A common control system will control the pumping station and keep the water level in the de-aerator tank constant. If the flow from the de-aerator tank to the distribution system falls below 50 kg/s, the pump in the production well will automatically reduce its speed, thus extracting less water from the geothermal reservoir.

5.3 De-aerator

The proposed system requires the installation of one collection tank to be used as a de-aerator. The de-aerator removes gases from the water, since they would otherwise cause a problem in the distribution system and in consumer's radiator systems. For a flow of 50 kg/s, the dimensions of such a de-aerator tank are estimated to be 5 m in diameter and 2 m in height, thus providing the water with 15 minutes of flow time through the tank for gas removal. After the de-aerator, the geothermal water should be pumped directly to the distribution system, maintaining constant pressure in the system.

5.4 Heat exchanger

Heat exchangers are commonly used in geothermal systems. A plate heat exchanger is suitable where pressure is not excessive and chemistry of the fluid requires that corrosion resistant metals be used. It consists of a series of plates with gaskets held in a frame by clamping rods. Plates are usually made of stainless steel or other corrosion resistant materials. Titanium is used where the geothermal fluid is of high salinity. Figure 11 shows the nature of fluid flow through the plate heat exchanger. The primary and secondary fluids flow in opposite directions on either side of the plates. The counter-current flow and high turbulence achieved in the plate heat exchanger provide for efficient thermal exchange in a small volume. Plate heat exchangers are assumed to be used for heating of fresh water as domestic hot tap water in Shargaljuut, and the plates are assumed to be of stainless steel 316L.

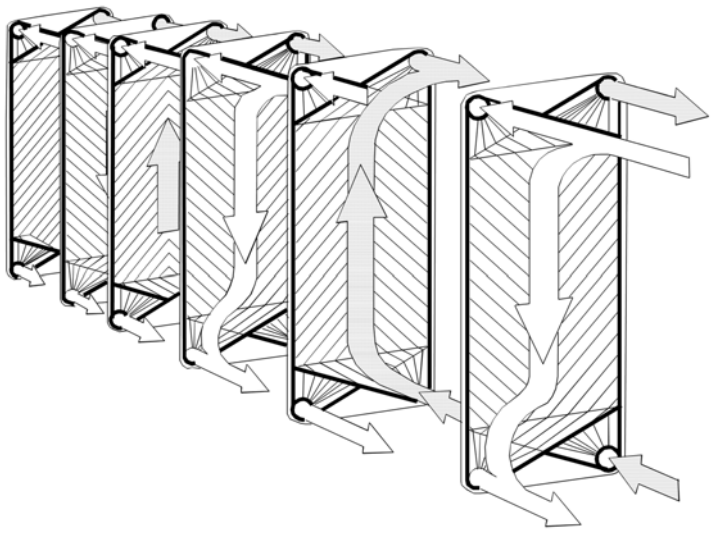

FIGURE 11: Fluid flow through the plate heat exchanger (Rafferty and Culver, 1998)

If it is assumed that there is no heat loss from the heat exchanger to the environment, the overall heat balance in the plate heat exchanger is expressed by the following equation:

$$m_g \cdot C_p \cdot (T_1 - T_2) = m_f \cdot C_p \cdot (T_4 - T_3)$$

where m_g = Mass flow of geothermal water [kg/s];
m_f = Mass flow of fresh water [kg/s];
C_p = Specific heat capacity of water [kJ/kg˚C];
T_1 = Inlet temperature of geothermal water [˚C];
T_2 = Outlet temperature of geothermal water [˚C];
T_3 = Inlet temperature of fresh water [˚C];
T_4 = Outlet temperature of fresh water [˚C].

5.5 Piping system

Collection and distribution pipes will be pre-insulated steel pipes. Pre-insulated pipes consist of an internal steel service pipe, insulated with polyurethane foam and protected by an outer polyethylene casing. This type of pipe is currently being used as the predominant piping system for district heating systems in Europe today. Many piping systems exist, differing widely in construction and materials, but a pre-insulated piping system is considered to give the best combination of price and quality in district heating systems with temperatures below 130˚C. These pipes are always buried, placed on a gravel and sand layer, surrounded by sand and are pre-stressed during their installation to eliminate the need for dynamic expansion joints. This type of system has been developed over many years and now constitutes a very safe and secure way of transporting thermal water. Figure 12 shows the typical underground pre-insulated piping system. Currently, pre-insulated pipes are not produced in Mongolia but are available in the market place in neighbouring countries.

5.6 Re-injection

The geothermal water from Shargaljuut hot spring has low content of dissolved solids. From a chemical point of view, the water can be disposed into Shargaljuut River as before. During increased exploitation of geothermal water, heat effects of disposal water from Shargaljuut hot spring have to fulfil local requirements which may demand some action regarding temperature. Where utilization leads to a drawdown in the reservoir, re-injection is often the solution to maintain a stable water level, and at the time it can solve problems related to disposal of geothermal water.

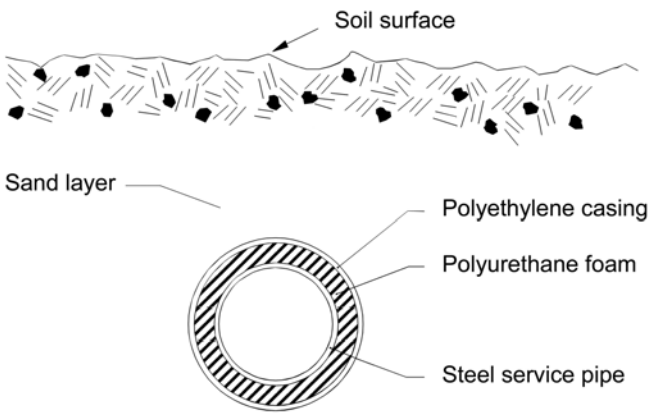

FIGURE 12: Pre-insulated piping system

6. APPLICATIONS

Direct utilization of geothermal energy refers to immediate use of heat energy, without converting it to some other forms such as electrical energy. Generally, the geothermal fluid temperatures required for direct-use applications are lower than those for economic electric power generation. Most direct-use applications use low- to moderate-temperature geothermal fluids in the range between 50 and 150˚C. Conventional water well drilling equipment can be used for drilling into low- and medium-temperature geothermal reservoirs. Low-temperature systems are also more widespread than high-temperature systems, and it is more likely that they are located near potential users.

The Lindal diagram (Gudmundsson et al., 1985) shown in Figure 13, indicates the temperature range suitable for various direct-use applications of geothermal energy. Agriculture, animal husbandry, aquaculture, and recreation require the lowest temperatures, with values from 25 to 95˚C. The amounts and types of chemicals and dissolved gases are major problems with plants and animals, thus heat exchangers are often necessary. Space heating in buildings and greenhouses, some industrial processes such as drying and washing, require temperatures in the range of 50-100˚C.

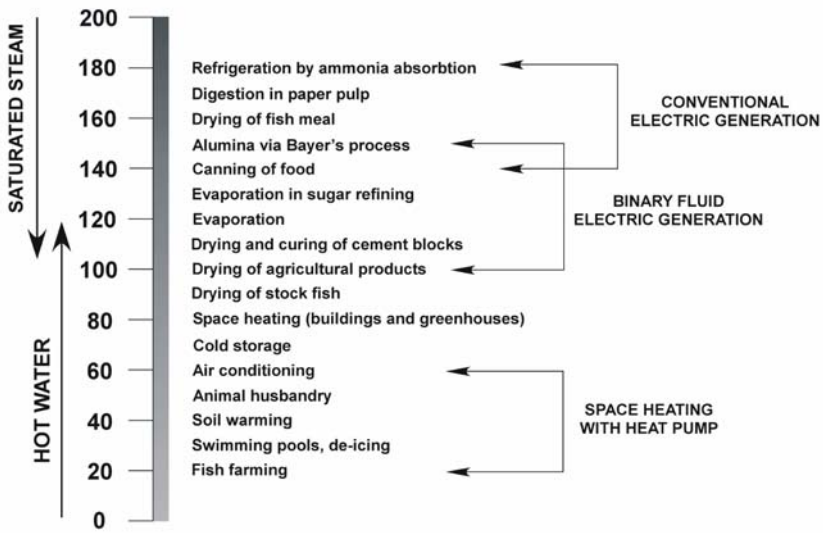

FIGURE 13: Lindal diagram on direct-use applications of geothermal resources (Gudmundsson et al., 1985)

6.1 Space heating

Mongolia has harsh and continental climate, where winters are extremely cold and summers are hot. There are large variations in seasonal and diurnal temperatures. As outdoor temperature is below +15˚C for about 8000 hours a year, space heating is needed almost all the year around. When a space heating system is being planned, it is necessary to determine the heating load of the system. The most exact method of doing this would be to consider each building separately and find its heating requirements for the most severe weather conditions expected. The total need for the system is then found as the sum of all such building needs.

The heat loss from a building is given by the equation:

$$Q = k_b \cdot (T_i - T_o)$$

where Q = Heat loss [W];
k_b = Overall heat transfer coefficient of building [W/˚C];
T_i = Indoor design temperature [˚C];
T_o = Outdoor design temperature [˚C].

The heat duty from a radiator is given by the equation:

$$Q = m_0 \cdot C_p \cdot (T_s - T_r)$$

where m_0 = Heating water flow rate [kg/s];
C_p = Specific heat capacity of water [kJ/kg˚C];
T_s = Supply water design temperature [˚C];
T_r = Return water design temperature [˚C].

For steady-state conditions, the heat flow from the radiators is equal to the building heat loss. So the heating water flow rate is obtained by the following equation:

$$m_0 = \frac{k_b \cdot (T_i - T_o)}{C_p \cdot (T_s - T_r)}$$

For radiator heating systems operating at specific conditions other than design conditions, the relative heat duty from a radiator is given by the following rule, specified by German standard DIN 4703:

$$\frac{Q}{Q_0} = \left\{ \frac{\Delta T_m}{\Delta T_{m0}} \right\}^{\frac{4}{3}}$$

where Q, Q_0 = Radiator heat duty at design, or specific condition [W];
ΔT_m, ΔT_{m0} = Radiator logarithmic mean temperature difference at design, or specific condition [°C].

The radiator logarithmic mean temperature difference is calculated by the following equations:

$$\Delta T_m = \frac{T_s - T_r}{\ln\left(\frac{T_s - T_i}{T_r - T_i}\right)} \quad ; \quad \Delta T_{m0} = \frac{T_{s0} - T_{r0}}{\ln\left(\frac{T_{s0} - T_{i0}}{T_{r0} - T_{i0}}\right)}$$

where T_s, T_{s0} = Supply water temperature at design, or specific condition [˚C];
T_r, T_{r0} = Return water temperature at design, or specific condition [˚C];
T_i, T_{i0} = Indoor temperature at design, or specific condition [˚C].

Since building volumes, the heat transfer coefficient of buildings, and the hot tap water requirement data are missing, heating requirements of space heating systems in Shargaljuut could not be calculated exactly. In order to estimate peak heating load of a space heating system, some assumptions had to be made. Buildings in the Shargaljuut resort centre were built during 1960-1980, according to Russian standards. During that time, bricks were used as the main construction material, wall thickness was 640 mm, roofs and floors were built with concrete blocks, and no special insulation material was used. The hotel building has 3 floors, sanatorium and clinic buildings have 2 floors, and others are single floor buildings. The heat transfer coefficient - U for new brick buildings is 1.8 W/m^2˚C for 3-story buildings or higher, 2 W/m^2˚C for 2-story buildings, and 2.2 W/m^2˚C for 1-story buildings. It could be up to 2.5 W/m^2˚C for non-standard one-story buildings.

Outdoor design temperature is chosen as -30˚C, and indoor design temperature is 20˚C. When a space heating system is being designed, it is not expected to be capable of maintaining the indoor design temperature during the possible coldest periods. Instead, a given minimum outdoor temperature, the system outdoor design temperature is selected, for which the space heating system capacity is designed. This system outdoor design temperature is somewhat higher than the lowest outdoor temperature expected for the area. When the outdoor temperature falls below the system outdoor design temperature, the heating system consumers may have to endure for a short while with a little lower room temperature than normally would be considered adequate. Some internal and external heat sources other than a heating system could help heat a building over a period of time. Such heat sources might include solar radiation, people, lights, and appliances.

The hotel building has 3 stories with a total floor area of 2500 m^2, and the total heating load of the building at design condition is 225 kW. The sanatorium and clinic buildings have 2 stories each with a total area of 800 m^2, and the total heating load is 80 kW. Other inhabited buildings with 1 story are non-standard buildings, the total floor area is 2000 m^2, and the total heating load is 250 kW. The total floor area of storage buildings and garages is 400 m^2, design outdoor temperature is chosen as -30˚C, design indoor temperature is 10˚C, the heat transfer coefficient is 2.5 Wm^2˚C, and the total heat load is 40 kW. The total floor area of inhabited buildings is 5300 m^2, and the total floor area of uninhabited buildings is 400 m^2. The total heat load of the resort centre at design conditions is estimated to be 595 kW.

The population within the Shargaljuut area is estimated to be 2000 people, mostly accommodated in Gers (typical housing for nomadic families), but some have small winter houses in the centre. Nomadic families normally settle far from each other during summer time, looking for better pastureland for their livestock, but settle around or close to the centre during winter time. In case a large-scale geothermal district heating system is planned and commissioned in the Shargaljuut community, people would benefit from the geothermal heating system, but a detailed survey on market trend is needed in order to estimate the market potential. A small community of 500 inhabitants or 5000 m^2 floor area of buildings is assumed to be connected to the space heating system in Shargaljuut. Total heating load will be 625 kW.

A plate heat exchanger assumed to heat fresh water from 6˚C up to 55˚C as domestic hot tap water for the resort centre and community. Daily consumption is assumed as 15 l of 55˚C hot water per unit floor area of residential buildings, and it totals 181 m^3/day or 1.8 kg/s constant. Total load for heating of hot tap water for domestic use of the resort centre and community is 370 kW. Domestic hot tap water load is not constant through daytime and weekdays, and peak load can be estimated triple the daily average.

Overall, the heating load requirement in the Shargaljuut area is assumed to be 1.22 MW for heating, and 370 kW for domestic hot tap water.

A radiator system is expected to be used for heating of the resort centre and community. Return water of 45˚C from the radiator system will be used for the floor heating system in Gers. The heating requirement for unit floor area of Ger at design condition is assumed to be 150 W/m^2˚C. With the average floor area of a typical Ger being 36 m^2, the total heating requirement for the Gers is 5.4 kW.

6.2 Health spa and recreation

The Shargaljuut hot springs have been utilised for recreation, therapeutic and balneological purposes for more than 300 years. People believe that they are effective for relieving many kinds of sickness, such as liver, gallbladder and stomach problems, neurological and skin disorders, hypertension, rheumatism, fatigue, etc. It is principally proven that physical or mechanical effects, and dissolved minerals of thermal water help the human body to rest and relax, and treat some diseases or disorders. The thermal effects of geothermal water are dominant over other effects associated with it, unless the chemical composition is very special. For balneological and therapeutic purpose, thermal water with relatively low temperature is currently being used for bathing with a combination of special mud treatment. Commercial health resort facilities have not been built in the Shargaljuut resort centre. Modern health spas, sauna, and steam baths should be designed and used in the resort centre, in order to offer better quality service for customers.

When the geothermal water comes in contact with atmosphere, the iron content of the geothermal water may oxidize to form iron hydroxide, causing it to turn a brownish colour. This will cause problems in piping systems and hot pots, so fresh water is supposed to be used in health spas. Outdoor hot spas with various water temperatures are assumed to be built in the resort centre. Design outdoor temperature is chosen as -20˚C, and it is assumed that the hot pots are closed when the outdoor temperature is lower than design temperature; design water temperature is chosen as 40˚C. The heating requirement of hot spas is assumed to be 65 W/m^2˚C per unit surface area of hot spa, and per unit temperature difference at design condition. It is assumed that 200 people will visit the hot spa during working hours for every day, and the surface area of the hot spa is expected to be 75 m^2. Then the heating requirement of the hot spa at design condition is 295 kW.

6.3 Snow melting

Precipitation is minimal, ranging from 2-4 mm for the winter months, so a snow melting system is not urgent for the Shargaljuut area. 300 m^2 of a snow melting system are assumed to be built in the hot spa facility in order to afford comfort for the customers. The heating requirement for the snow melting system is expected to be 150 W/m^2. The total heating load for the snow melting system is 45 kW.

6.4 Horticulture

Because of the close proximity to the market place in Bayankhongor province centre and the great availability of geothermal energy and fresh water, greenhouses and soil warming would be one of the main applications of geothermal energy in the Shargaljuut hot spring area. A number of commercial crops or seedlings can be raised in greenhouses, for harvesting or prior to cultivating outside.

6.4.1 Greenhouses

In order to design a greenhouse heating system, the peak heating load of the greenhouse should be calculated. Heat losses from a greenhouse are composed of two components: transmission heat losses through walls and roofs, and infiltration and ventilation losses. Transmission heat loss is calculated using the following equation:

$$q_t = U \cdot A \cdot (T_i - T_o)$$

where q_t = Heat transmission losses through walls and roofs [W];
U = Heat transfer coefficient [W/m^2˚C];
A = Surface area [m^2];
T_i = Indoor design temperature [˚C];
T_o = Outdoor design temperature [˚C].

Acceptable values of the heat transfer coefficient for various materials, depending on wind speed are shown in Table 4.

TABLE 4: Heat transfer coefficient at various wind speeds [W/m^2˚C]

Material	Wind speed [km/h or m/s]					
	0	**8 - 2.24**	**16 - 4.47**	**24 - 6.66**	**32 - 8.94**	**40 - 11.2**
Glass	4.34	5.40	5.91	6.20	6.47	6.70
Fiberglass	3.95	4.91	5.39	5.7	5.87	6.12
Single poly	4.60	5.68	6.19	6.5	6.76	6.98
Double poly	3.04	3.58	3.83	4.0	4.07	4.18

The infiltration heat loss is calculated using the following equation:

$$q_i = m_0 \cdot C_p \cdot (T_i - T_o)$$

where q_i = Infiltration heat losses [W];
m_0 = Mass flow rate of infiltrated outside air [kg/s];
C_p = Specific heat capacity of air at constant pressure [kJ/kg˚C];
T_i = Indoor design temperature [˚C];
T_o = Outdoor design temperature [˚C].

The mass flow of infiltrated air, m can be calculated using the following relation:

$$m = \rho \cdot V_0$$

where ρ = Density of infiltrated air [kg/m^3];
V_0 = Volume flow rate of infiltrated outside air [m^3/s].

For greenhouse design, the air change method is used to estimate the volume flow rate of infiltrated air from the outside into the greenhouse. The air change method is based upon the number of times per hour that the air in the greenhouse is replaced by cold air leaking in from outside. The number of air changes which occur is a function of wind speed, greenhouse construction, and inside and outside design temperatures. Values of air change for different types of greenhouse construction are shown in Table 5.

TABLE 5: Air change data for various glazing materials

Material	Air changes per hour
Single glass	2.5-3.5
Double glass	1.0-1.5
Fiberglass	2.0-3.0
Single poly	0.5-1.0
Double poly	0.0-0.5

An addition of transmission and infiltration heat loss gives total heat loss of greenhouses as shown in the following equation:

$$q_{total} = q_t + q_i$$

This is a peak or design heating load for the greenhouse. The heating equipment selected for the structure would have to be capable of meeting this heating requirement. In many cases, the quantity of energy required to heat a greenhouse over an entire year is of interest. For conventionally heated greenhouses, this figure would allow one to calculate annual heating cost. The annual heating energy determination is complex, involving many repetitious heat loss and solar heat gain calculations. Actual heating requirements are influenced by the local climate, solar radiation, set point temperatures and greenhouse construction.

The main heat source gain for greenhouses is heat gain from the solar radiation and heat gain from the heating system. Solar radiation is the most determinant factor in greenhouse cultivation. Glass and other greenhouse cover materials allow short-wave radiation to penetrate, while they prevent long-wave radiation to leave the greenhouse. Hence, the solar energy entering the greenhouse is calculated according to the following equation:

$$q_s = I \cdot \tau \cdot \gamma \cdot A_f$$

where q_s = Useful solar energy [W];
I = Direct solar radiation falling on a horizontal plane [W/m^2];
τ = Light transmission coeff. of the greenhouse cover for solar radiation [dimensionless];
γ = Constant of proportion of solar radiation to increase in internal temperature [dimensionless], γ is in the range of 0.3-0.7;
A_f = Area of the greenhouse floor [m^2].

Heat gain from the heating system to the greenhouse environment is calculated by the following equation:

$$q_h = m_0 \cdot C_p \cdot (T_{wi} - T_{wo})$$

where q_h = Heat gain from heating system [W];
m_0 = Heating water flow rate [kg/s];
C_p = Specific heat capacity of water [J/kg˚C];
T_{wi} = Heating water inlet temperature [˚C];
T_{wo} = Heating water outlet temperature [˚C].

As heat loss from the greenhouse depends to a high degree on size of the greenhouse, an average size of a greenhouse was chosen as an example. The size of blocks used for calculation, is shown in Figure 14. The greenhouse consists of 3 blocks, 40 m in length, and the glazing material is single glass. The total surface area of glazing material of the greenhouse is 1193.5 m^2, the total volume is 2688 m^3, and the total floor area is 768 m^2. The heat transfer coefficient of single glass is 5.91 W/m^2˚C (wind speed 5 m/s), the air change in the greenhouse per hour is 3. The indoor design temperature is 20˚C, whereas the outdoor design temperature is -20˚C. Then the heat loss from the entire greenhouse is q = 315 kW, hence, the heat loss per unit of floor area is Q = 410 W/m^2, or heat loss per unit of floor area and per unit of temperature difference is 10.25 W/m^2˚C.

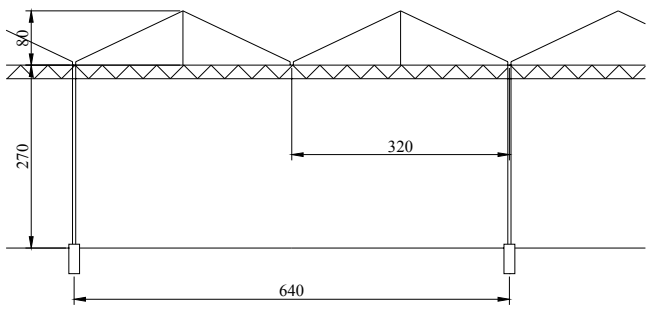

FIGURE 14: Size of blocks of greenhouse

Hourly values of outdoor temperature, direct solar radiation, and effective sunshine duration data for the entire year were used for calculating the daily mean heating load profile per unit floor area of the greenhouse. The light transmission coefficient of the glazing material (τ) was chosen as 0.8, and the constant of proportion of solar radiation to increased internal temperature (γ) was chosen as 0.5. According to calculations, the annual heating demand per unit floor area of the greenhouse is 1900 kWh/m^{2}year. It will be reduced down to 1820 kWh/m^{2}year, if indoor temperature is lowered according to outdoor temperature in order to keep the maximum design temperature difference at 40˚C, when the outdoor temperature is below -20˚C. It means that when outdoor temperature is -30˚C, indoor temperature should be 10˚C. If the greenhouse is closed and not heated from November to February, annual heating demand will be reduced down to 800 kWh/m^{2}year.

6.4.2 Soil warming

The main purpose of soil heating is to extend the growing season and maintain constant soil temperature in order to be able to increase yield. Monthly mean soil temperature in Mongolia is shown in Figure 5. It is below 0˚C during early spring and late autumn, and exceeds 20˚C in July. But it is possible to defrost soil and start planting in early spring and maintain over 20˚C with soil heating, during all the cultivation period. In winter, the soil normally freezes, forming a core of ice extending some 30-80 cm down into the soil profile. The ice-core prevents drainage of the soil in spring taking a time for it to melt away so the soil gets waterlogged and cold. If soil heating is applied, ice formation is prevented and soil preparations, planting or sowing can already take place early in spring, and risks from frost damage after planting or sowing can also be reduced. It is also important to stop heating during winter in order to allow frosts and cracks to form in the soil, and to sterilize the soil. The soil heating system is normally placed at a depth of 65-85 cm, with 1-2 m spacing, ploughing down PEL-pipes with a tractor. The flow rate of inlet water is controlled to maintain a temperature of 20-23˚C in the soil. Heating can be supplied by means of wastewater from the greenhouses. A schematic drawing of a typical soil warming system is shown in Figure 15.

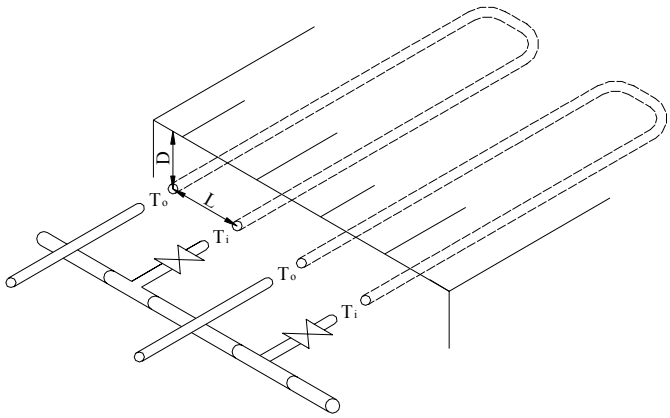

FIGURE 15: Typical soil warming system (Gudmundsson, 1983)

The factors influencing temperature distribution in a cross-section of soil above the pipes are the air temperature, the inlet and outlet water temperature, the surface heat transfer coefficient of soil, the effective thermal conductivity of soil, and the depth and distance between the pipes. For calculating the heating requirements of soil warming, the following cross-correlation scheme is used (Gudmundsson, 1983):

$$q = (1+\theta_k)\left\{(1+0.2\frac{L}{D})\cdot\ln(1+B_i)\right\}^{0.2}\cdot\left\{0.056+0.483\frac{D}{L}-0.215(\frac{D^2}{L})\right\}$$

$$q = Q\frac{D}{L\cdot k\cdot(T_i-T_u)}$$

The following dimensionless parameters are used in this correlation:

$$B_i = h\frac{D}{k} \quad ; \qquad \theta_k = \frac{(T_o-T_u)}{(T_i-T_u)} \quad ; \qquad \frac{L}{D}$$

where B_i = Biot number [dimensionless];
h = Surface heat transfer coefficient of soil [W/m^2˚C];
k = Effective thermal conductivity of soil [W/m˚C];
θ_k = Dimensionless temperature [dimensionless];
T_i = Inlet design water temperature [°C];
T_o = Outlet design water temperature [°C];
T_u = Air temperature [°C];
D = Depth of pipe [m];
L = Distance between pipes [m];
q = Heat flux from pipe [dimensionless];
Q = Heat flux [W/m^2].

This cross-correlation scheme was generated with the method of finite difference, using the following assumptions: The effective thermal conductivity of soil is constant and uniform in the cross-section. The surface heat transfer coefficient through the soil surface is constant and the same along the whole surface. The air temperature is constant. Stable temperature conditions are in the soil cross-section. Many pipes are running parallel in the soil so no end effects are evident. There is no axial heat transfer along the pipes' cross-sections. The correlation is reasonably accurate if the dimensionless parameters are in the following range: $0 \leq \theta_k \leq 1$; $1.2 \leq L/D \leq 4$; $2.5 \geq B_i \geq 10$

The desired soil temperature at 20-30 cm depth is assumed to be 20-25°C. The mean air temperature is taken as T_u = 5°C, the inlet design water temperature, T_i = 60°C, the outlet design water temperature, T_o=30°C. Then the dimensionless temperature θ_k = (30-10)/(60-10)=0.45. Burial depth of the pipes is chosen as D = 0.6 m, the distance between two pipes L = 1.5 m, then L/D = 1.5/0.6 = 2.5. The effective thermal conductivity of the soil is taken as k = 1 W/m˚C, the surface heat transfer coefficient as h = 10 W/m^2˚C, then the Biot number becomes B_i = 6. The dimensionless heat flux is calculated as q = 0.36, and the heat flux is Q = 50 W/m^2.

6.4.3 Soil disinfection

For soil disinfection, three main methods are used in Iceland. Where steam is available, it is led under a tight plastic sheet, which is put over the beds and left running for 24 hours, which is sufficient for adequate disinfection. Where only hot water is available, an improved Hoddeston method (Johnsson and Aas, 1960) is used where nozzles are put on a steel pipe to distribute the hot water over the soil. Another simpler way for soil disinfection is to soak the soil thoroughly with 80-90˚C hot water. For Mongolia, the last method can be used because of its simplicity and effectiveness.

7. CASCADED USE

The main parameters of a geothermal system in Shargaljuut are briefly reviewed as follows: 50 kg/s of 89˚C hot water are expected to be extracted from the geothermal reservoir as maximum production. The equivalent peak-load time of a space heating system in the Shargaljuut area is 4300 hours a year. Heating requirements of various applications at design conditions are 595 kW for the space heating system for the resort centre, 625 kW for the space heating system for the community, 370 kW for the domestic hot water supply system for the resort centre and the community, 295 kW for the hot spa, 45 kW for snow melting, 410 W/m^2 for the greenhouses, and 50 W/m^2 for soil warming.

7.1 The radiator and floor heating system

The supply water design temperature for the radiator system is 85˚C and the return water design temperature is 45˚C. Then the flowrate of thermal water to maintain indoor design temperature in buildings of the resort centre and community is 7.4 kg/s. The return water from the radiator system is capable to heat 3200 m^2 total floor area of Gers or 90 individual Gers, if the supply water design temperature for the floor heating system is 45˚C and the return water temperature is 30˚C. Schematic diagram of the radiator and floor heating cascade system is shown in Figure 16. As soon as the outdoor temperature is lower than the design temperature, flow rate of thermal water through the radiators should be reduced in order to maintain constant indoor temperature in the buildings. From the time when the flow rate is decreased, then the return water temperature from the radiator is also decreased and no longer serves as the only supply water for the floor heating system. Thus, an additional amount of 85˚C water is needed to be mixed with the return water from the radiator system, before it goes to the floor heating system. Here it is assumed that this is done with an electric motor driven valve, which is controlled by

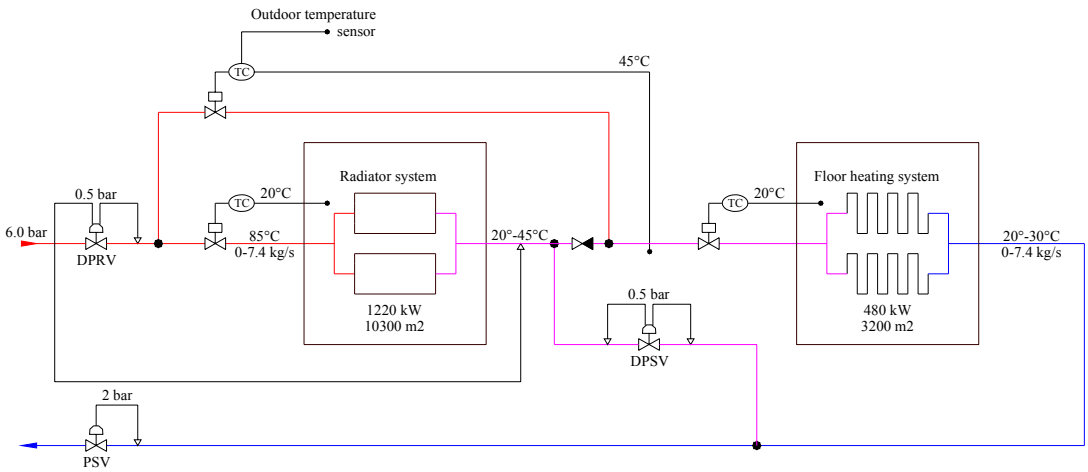

FIGURE 16: Schematic diagram of radiator and floor heating cascade system

the outdoor temperature and the supply water temperature for Gers, simultaneously. Supply water flow rate for the radiator and floor heating system will be controlled by the indoor temperature of the buildings and Gers, respectively. Performance of the radiator and floor heating cascade system for different heating loads is shown in Table 6.

TABLE 6: Performance of radiator and floor heating cascade system

$Load_{rad}$ [%]	$T_{s\ rad}$ [˚C]	$T_{r\ rad}$ [˚C]	$m_{0\ rad}$ [kg/s]	$Load_{floor}$ [%]	$T_{s\ floor}$ [˚C]	$T_{r\ floor}$ [˚C]	$m_{0\ floor}$ [kg/s]	$m_{a\ inj\ of\ 85˚C}$ [kg/s]
100	85.00	45	7.37	100	45.00	30	7.37	0
80	85.00	36.54	4.87	80	43.13	27.45	5.64	0.77
60	85.00	29.20	3.17	60	41.28	24.92	4.05	0.88
40	85.00	23.50	1.92	40	39.51	22.46	2.59	0.68
20	85.00	20.38	0.91	20	38.08	20.50	1.26	0.34

7.2 The hot spa and snow melting system

Fresh water is supposed to be used in hot spas, and the thermal water is used for heating of spa water in heat exchangers. The thermal water is assumed to be cooled in heat exchangers from 85˚C to 55˚C, and then used for balneological purposes. The flowrate of thermal water to maintain design conditions for the hot spa is 2.3 kg/s. A small amount of return water from the heat exchanger is used for the snow melting system during winter time. The size of the snow melting system is 300 m^2 and the thermal water flow rate for snow melting is 0.4 kg/s. A schematic diagram of the hot spa and snow melting cascade system is shown in Figure 17.

The primary water flow rate in the heat exchanger will be controlled by secondary water temperature. The supply water flow rate for the snow melting system will be controlled by the return water temperature from the system, where it should not be less than 25˚C in order to prevent frost damage in the system.

7.3 Tap water for domestic uses

The total demand for hot tap water for Shargaljuut is 1.8 kg/s. Cold groundwater is heated up to 55˚C in plate heat exchangers, and temperature of the groundwater is assumed to be 6˚C all year around. The geothermal water of 85˚C is assumed to cool down to 25˚C in heat exchangers. Then the mass flow of

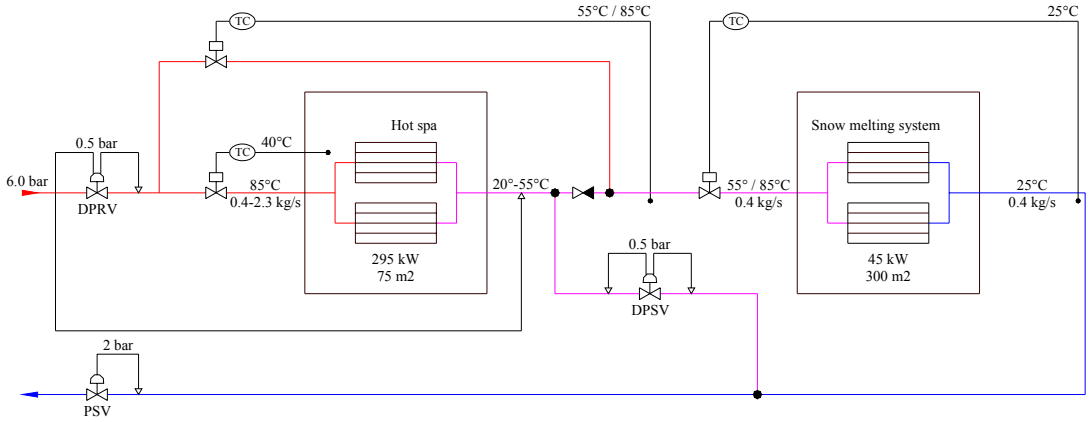

FIGURE 17: Schematic diagram of the hot spa and snow melting cascade system

geothermal water is calculated to be 1.4 kg/s. A schematic diagram of the tap water system is shown in Figure 18. 1 kg/s of fresh water is used as cold tap water. A total of 2.8 kg/s of fresh water is used for domestic purposes and it will be extracted from the fresh water well that was drilled in 1973, which is being used currently. Hot tap water will be cooled in the pipe if there is no consumption. A small pump and an additional narrow pipe are used in order to keep the water temperature constant, circulating a small amount of the water in the pipe. The primary water flow rate in the heat exchanger will be controlled by the secondary water temperature.

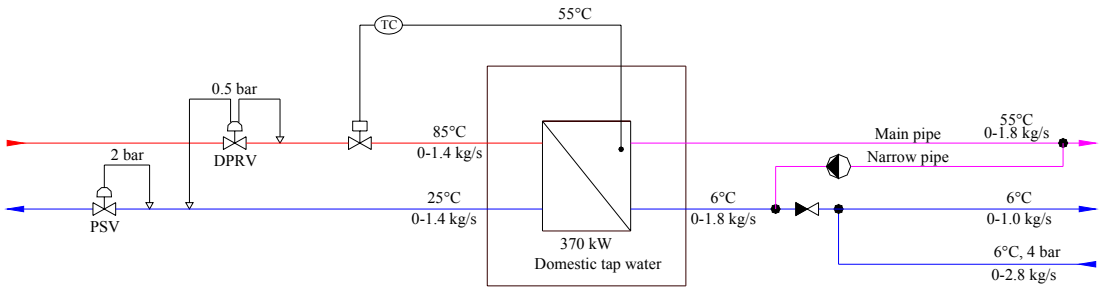

FIGURE 18: A schematic diagram of the tap water system

7.4 The greenhouse and soil warming system

Thermal water of 39 kg/s is assumed to be used for the greenhouses and then in cascade for soil warming. The total floor area of the greenhouses that are heated with geothermal is calculated as 11,900 m^2. As design conditions for heating systems for greenhouses and soil warming are different, heating load for the systems are also different. When the soil warming system runs in full load, the heating system for the greenhouses runs at 40% of full load and then the total area of soil warming is calculated as 39,000 m^2. The performance of the greenhouse and soil warming system is shown in Table 7, whereas a schematic diagram of the greenhouse and soil warming system is shown in Figure 19.

TABLE 7: Performance of greenhouse and soil warming cascade system

$Load_{gh}$ [%]	$T_{s\ gh}$ [°C]	$T_{r\ gh}$ [°C]	$m_{0\ gh}$ [kg/s]	$Load_{sw}$ [%]	$T_{s\ sw}$ [°C]	$T_{r\ sw}$ [°C]	$m_{0\ sw}$ [kg/s]	$m_{a\ inj\ of\ 85°C}$ [kg/s]
100	85.00	55.00	38.90	-	-	-	-	-
80	85.00	43.78	22.65	-	-	-	-	-
60	85.00	33.80	13.68	-	-	-	-	-
40	85.00	25.69	7.87	100	55.00	25.00	15.56	7.69
20	85.00	20.77	3.63	50	53.00	21.01	7.3	3.66

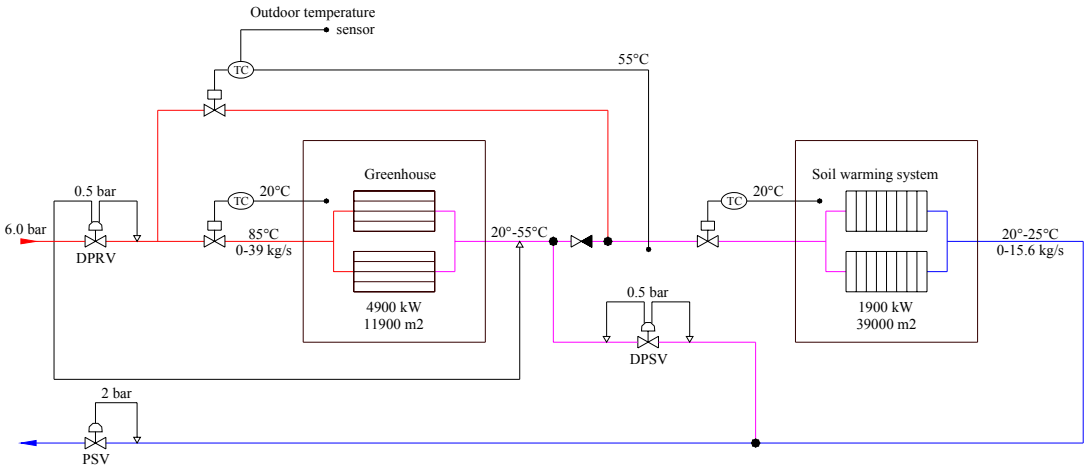

FIGURE 19: A schematic diagram of the greenhouse and soil warming cascade system

A differential pressure reduction valve (DPRV) and a differential pressure sustaining valve (DPSV) will maintain constant pressure difference over all the systems in cascade, at 0.5 bar as a maximum. A pressure sustaining valve (PSV) will maintain the constant back pressure in the cascade system, at 2 bar as a minimum.

8. CONCLUSIONS

Design considerations for a geothermal direct-use system, possible applications and cascaded use of geothermal energy from the low-temperature field, Shargaljuut, Mongolia were studied. Equivalent peak-load time for the space heating system in the Shargaljuut area is calculated as 4300 hours a year and the heating load duration is relatively stable, almost the same as in Iceland. Hence, a single distribution geothermal space heating system without peak load station can be used in the Shargaljuut area.

According to chemical analysis, the thermal water is suitable to be used as a heating medium for direct-use applications. No problems, related to scaling of amorphous silica in heating systems and equipments are expected. No calcite scaling is expected when the thermal water is cooled, but possible scaling when the thermal water is boiled or mixed with different types of water, and treatment is needed when a peak load boiler is used. No corrosion is expected, since no oxygen is absorbed into the water and hydrogen sulphide remains, but care must be taken in designing of storage tanks and systems for collecting water.

Heating requirements of various applications at design conditions are 1220 kW for the space heating system, 370 kW for the domestic hot tap water, 295 kW for the hot spa, 45 kW for the snow melting, 5.4 kW for the Ger, 410 W/m^2 for the greenhouses, and 50 W/m^2 for soil warming. Maximum production from the geothermal reservoir is expected to be at 50 kg/s as peak load. Thermal water of 11 kg/s is needed for heating and for hot tap water for the 10,300 m^2 floor areas of buildings, heating of 3200 m^2 of floor area of Gers, 75 m^2 of hot spas and 300 m^2 of snow melting systems. Thermal water of 39 kg/s is needed for the heating of 11,900 m^2 of greenhouses and 39,000 m^2 of soil warming.

ACKNOWLEDGEMENTS

I would like to express my warm gratitude to Dr. Ingvar B. Fridleifsson, Director of UNU-GTP, Mr. Lúdvík S. Georgsson, Deputy Director of UNU-GTP, Mrs. Gudrún Bjarnadóttir, Mrs. Maria-Victoria Gunnarsson, in the UNU staff, and all my lecturers and teachers for providing me with their deep knowledge and practice, warm help and kind support. I sincerely thank my supervisor, Mr. Thorleikur

Jóhannesson for his guidance for planning and designing my project. And I would also like to thank Mr. Árni Ragnarsson, Mr. Sverrir Thórhallsson, and Mr. Sigurjón Arason for their help. I would like to express my heartfelt thanks to my beloved wife, Sukhgerel Javzan for all her love and support, patience and sacrifice, during my time in Iceland.

REFERENCES

Arnórsson, S., Sigurdsson, S. and Svavarsson, H., 1982: The chemistry of geothermal waters in Iceland I. Calculation of aqueous speciation from 0˚C to 370˚C. *Geochim. Cosmochim. Acta, 46,* 1513-1532.

Bjarnason, J.Ö., 1994: *The speciation program WATCH, version 2.1*. Orkustofnun, Reykjavík, 7 pp.

Culver, G.G., and Rafferty, K.D., 1998: Well pumps. In: Lund, J.W., Lienau, P.J., and Lunis, B.C., (eds.), *Geothermal direct use engineering and design guidebook*. Geo-Heat Centre, Oregon Institute of Technology, Klamath Falls, Oregon, 211-239.

Dorjsuren, P., Oyun, Ts., and Purevsuren, P., 1990: *Shargaljuut hot spring* (in Mongolian). Research and Educational Center of Mongolian Trade Union, Ulaanbaatar, Mongolia, 30 pp.

Fournier, R.O., 1977: Chemical geothermometers and mixing model for geothermal systems. *Geothermics, 5*, 41-50.

Fournier, R.O., and Potter, R.W., 1982: A revised and expanded silica (quartz) geothermometer. *Geothermal Resources Council, Bull., Nov. 1982*, 3-12.

Giggenbach, W.F., 1991: Chemical techniques in geothermal exploration. In: D'Amore, F. (coordinator), *Application of geochemistry in geothermal reservoir development*. UNITAR/UNDP publication, Rome, 119-142.

Gudmundsson, J.S., 1983: Geothermal soil heating in Iceland. *Geoth. Res. Council, Transactions, 7,* 601-606.

Gudmundsson, J.S., Freeston, D.H., and Lienau, P.J., 1985: The Lindal diagram. *Geothermal Resources Council, Transactions, 9*, 15-19.

Johnsson, D., and Aas, K., 1960: Investigation of the technique of soil steaming (in Icelandic). *Acta Agriculturae Scandinavica, Supplementun, 9*, 69 pp.

Lkhagva, M., 1973: *Report on hydro-geological survey in Shargaljuut hot spring* (in Mongolian). Geological Authority of Ulaanbaatar, Ulaanbaatar, Mongolia.

Meteorological Institute of Mongolia, 1990: *Meteorological compilation of Bayankhongor aimag* (in Mongolian). Meteorological Institute of Mongolia, Ulaanbaatar, Mongolia.

Rafferty, K.D., and Culver, G.G., 1998: Heat exchangers. In: Lund, J.W., Lienau, P.J., and Lunis, B.C., (eds.), *Geothermal direct use engineering and design guidebook*. Geo-Heat Centre, Oregon Institute of Technology, Klamath Falls, Oregon, 261-278.

Remand, J., and Lang, R., 1999: *METEONORM program, version 4.0.* Meteotest, CH-3012, Bern, Switzerland, 82 pp.